Whirlpool components

Electro-valve
for temperatures up to 180 ° C

Electrovalve for temperatures up to 180 ° C is intended for the closing the steam inlet (eg to steam rooms) but also for installations where it is necessary to close pipeline with hot water or with other hot medias. Body of electrovalve is made of brass. Electrovalve is offered in three versions G1/ 2, G3/4, G1.

Description: temperature: - 10 + 180°C
pressure: 0,5 - 10 bar
12 W DC, 230 V/50 Hz, 14 VA

Areliable product, troublefree service.

www.whirlpoolcomponents.cz NEW!

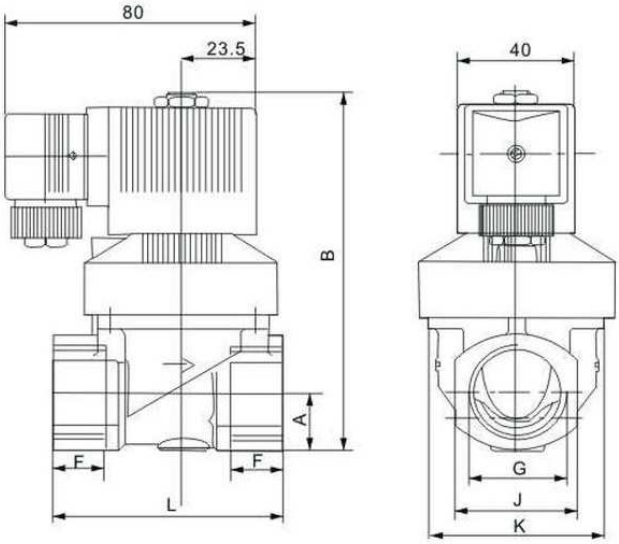

Code:	Description:	
200050	Electrovalve G1/2 for temperatures up to 180 ° C	185.91 €
200051	Electrovalve G3/4 for temperatures up to 180 ° C	230.17 €
200052	Electrovalve G1 for temperatures up to 180 ° C	274.44 €

Displayed prices do not include VAT.
Final price also depends on actual Exchange rate between CZK/EUR
For more information visit our websites www.hydroair.cz, www.lorema-wellness.cz
If you are not registered in our company LOREMA Wellness Ltd., register yourselves and you get the option to purchase at a discount.

Date: 5.11. 2015
Rev. : 138 01 15 EN

LOREMA
LOREMA Wellness s.r.o., Mělnická 87, 250 65 Bořanovice, Pakoměřice, Czech Republic
tel.: +420 283 090 759, +420 283 090 776, fax: +420 283 090 771, email: info@hydromasaze.cz
web: www.whirlpoolcomponents.cz, www.whirlpoolbaths.cz